KITZ

Carbon and Low Alloy Steel Valves

ASME Class 150/300/600/900/1500/2500
Gate, Globe and Check Valves, Bolted Bonnet Design

KITZ CORPORATION

INDEX

Profile of KITZ Cast Carbon Steel Valves
Standard Product Range 01
Standard Seat Material and Construction 02
Product Coding 02
General Design Specifications 03
Valve Shell Materials 03
KITZ Low Temperature Service Valves 03
Valve Trim Materials 03
Disc seat and body seat 04
Stem and bonnet bushing (backseat bushing) 04
Body Seat Rings 04
Bonnet Gasket Materials 05
Contact Face of Flanges 05
NACE Valves 05
Inspection and Warranty Policy of KITZ Corporation 06
Typical KITZ Inspection Flow 06
KITZ Low Emission Service Valves 07
Design Features of KITZ Gate Valve Wedges (Discs) 08

Valve Specifications

Class	Product Code	Valve Type	Construction	Page
150	150SCLS	Gate	B.B., O.S.&Y.	09
300	300SCLS	Gate	B.B., O.S.&Y.	09
600	600SCLS	Gate	B.B., O.S.&Y.	10
900	900SCLS	Gate	B.B., O.S.&Y.	10
1500	1500SCLS	Gate	B.B., O.S.&Y.	11
150	150SCJS	Globe	B.B., O.S.&Y.	12
300	300SCJS	Globe	B.B., O.S.&Y.	12
600	600SCJS	Globe	B.B., O.S.&Y.	13
900	900SCJS	Globe	B.B., O.S.&Y.	13
1500	1500SCJS	Globe	B.B., O.S.&Y.	14
150	150SCOS	Check	B.C.	15
300	300SCOS	Check	B.C.	15
600	600SCOS	Check	B.C.	16
900	900SCOS	Check	B.C.	16
1500	1500SCOS	Check	B.C.	17

Through Conduit Gate Valve 18
Pressure Seal Bonnet Valve 19
Care for Handling Valves 20
Pressure-Temperature Ratings 21

The products introduced in this catalog are all covered by the ISO 9001 certification awarded KITZ Corporation in 1989, the earliest in the valve industry.

Profile of KITZ Cast Carbon Steel Valves

KITZ's wide product range helps customers save on procurement costs by reducing the number of suppliers. It has recently been expanded with the introduction of low emission service valves that exceed the US federal environment protection requirement of a 500 ppm limit on external leakage of toxic gases and chemicals from valves and other plant equipment. Every customer is trying hard to improve their plant life cycle by targeting valve maintenance problems as an essential management program. KITZ's low emission service valves offered in hydrocarbon and chemical industries a realistic and timely solution.

To compliment its state-of-the-art production system and facilities, KITZ has committed itself to quality assurance management to the unparalleled in the valve industry. Its aggressive employment of quality management was confirmed by the Bureau Veritas Quality International* of London when they chose KITZ for their premiere presentation of the ISO 9001 certification in 1989, the earliest in the valve industry.

*KITZ has been authorized by the Lloyd's Register Quality Assurance of the United Kingdom from 2013.

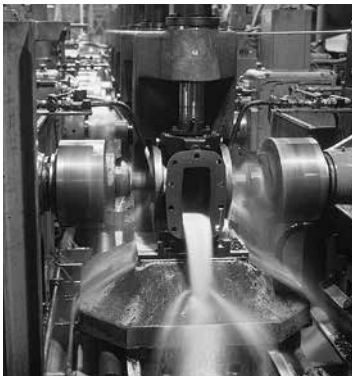

Machining

Field application 1

Field application 2

KITZ Ina Plant, Japan
(ISO 9001 certified)

KITZ CORPORATION of
JIANGSU KUNSHAN
(ISO 9001 certified)

Standard Product Range

KITZ Cast carbon Steel Valves, RF-flanged*(1), Bolted Bonnet Design

Valve Type	ASME Class	Design Standard		Material		Nominal Size / Code	1 1/2	2	2 1/2	3	4	5	6	8	10	12	14	16	18	20	22	24	26	28	30	32	34	36	Page
		P-T Rating	Wall Thickness	*(2) Shell	*(3) Trim		40	50	65	80	100	125	150	200	250	300	350	400	450	500	550	600	650	700	750	800	850	900	
Gate	150	ASME B16.34	API 600 BS 1414	WCB	F6/HF	*(4) 150SCLS	●	●	●	●	●	●	●	●	●	●	●	●	●	●	●	●	●	●	●	●	●	●	09
	300					300SCLS	●	●	●	●	●	●	●	●	●	●	●	●	●	●	●	●	●	●	●	●	●	●	09
	600					600SCLS		●	●	●	●	●	●	●	●	●	●	●	●	●	●	●							10
	900					900SCLS		●		●	●		●	●	●	●	●	●	●	●		●							10
	1500					1500SCLS		●	●	●	●		●	●	●	●	●	●											11
Globe	150		API 600 BS 1873	WCB	F6/HF	150SCJS	●	●	●	●	●	●	●	●	●	●	●	●	●										12
	300					300SCJS	●	●	●	●	●	●	●	●	●	●	●	●											12
	600					600SCJS		●	●	●	●	●	●	●	●	●													13
	900					G-900SCJS				●	●		●	●															13
	1500					1500SCJS		●	●	●	●		●	●															14
Swing Check	150		API 600 BS 1868	WCB or A105	F6/HF	150SCOS	●	●	●	●	●	●	●	●	●	●	●	●	●	●		●	●	●	●				15
	300					300SCOS	●	●	●	●	●	●	●	●	●	●	●	●	●	●		●		●	●				15
	600					600SCOS		●	●	●	●		●	●	●	●	●	●	●	●		●							16
	900					900SCOS				●	●		●	●	●	●	●	●	●	●									16
	1500					1500SCOS		●	●	●	●		●	●	●	●	●	●											17

*(1): Butt-welding end available as an option.
Refer to "Contact Faces of Flanges" on Page 05.
*(2): For special shell materials, refer to "Valve Shell Materials" on Page 03.
*(3): For special trim materials, refer to "Valve Trim Materials" on Page 03.
*(4): Nominal size larger than 36 are available for special orders.

Information on through conduit gate and pressure seal valves are found on Pages 18 and 19, respectively.

Standard Seat Material and Construction

Valve Type	KITZ Product Code	Part \ Nominal Size	1 1/2	2	2 1/2	3	4	5	6	8	10	12	14	16	18	20	22	24	26	28	30	32	34	36
			40	50	65	80	100	125	150	200	250	300	350	400	450	500	550	600	650	700	750	800	850	900
Gate	150SCLS, 300SCLS	Disc	●	●	●	●	●	◆	◆	◆	◆	◆	◆	◆	◆	◆	◆	◆	◆	◆	◆	◆	◆	◆
		Body Seat	■	■	■	■	■	■	■	■	■	■	■	■	■	■	■	■	■	■	■	■	■	■
	600SCLS	Disc		●	●	●	●	◆	◆	◆	◆	◆	◆	◆	◆	◆	◆	◆						
		Body Seat		■	■	■	■	■	■	■	■	■	■	■	■	■	■	■						
	900SCLS, 1500SCLS	Disc		●	●	●	●		◆	◆	◆	◆	◆	◆	◆	◆	◆	◆						
		Body Seat		■	■	■	■		■	■	■	■	■	■	■	■	■	■						
Globe	150SCJS, 300SCJS	Disc	●▲	●▲	●▲	●▲	●▲	▲	▲	▲	▲	▲	▲	▲	▲									
		Body Seat	■	■	■	■	■	■	■	■	■	■	■	■	■									
	600SCJS	Disc		●	●	●	●	▲	▲	▲	▲	▲												
		Body Seat		■	■	■	■	■	■	■	■	■												
	900SCJS, 1500SCJS	Disc		●	●	●	●		▲	▲														
		Body Seat		▼	▼	▼	▼		▼	▼														
Swing Check	150SCOS, 300SCOS	Disc	●◆	●◆	●◆	●◆	●◆	●◆	●◆	◆	◆	◆	◆	◆	◆	◆		◆	◆	◆	◆			
		Body Seat	■	■	■	■	■	■	■	■	■	■	■	■	■	■		■	■	■	■			
	600SCOS	Disc		●	●	●	●		●	◆	◆	◆	◆	◆	◆	◆		◆						
		Body Seat		■	■	■	■		■	■	■	■	■	■	■	■		■						
	900SCOS, 1500SCOS	Disc		◆	◆	◆	◆		◆	◆	◆	◆	◆	◆	◆	◆								
		Body Seat		■	■	■	■		■	■	■	■	■	■	■	■								

●: 13Cr Disc
◆: Cast Steel Disc-13Cr Deposited Seats
■: Steel Seats-Hardfaced and Welded
▲: Steel Disc-13Cr Deposited Seats
▼: Directly Deposited Hardfacing

PRODUCT CODING

G- 150 SC LS6CY

5 4 1 2 3

1 ASME pressure class:
150 through 2500

2 Shell material code:
Carbon and low alloy steel are always identified as "SC"

3 Other valve specifications:

L S 6C Y

a b c b

a Valve type code:
L: Gate valve
J: Globe valve
O: Swing check valve
L6DS: Through conduit gate (Slab Type)
L6DE: Through conduit gate (Expanded Type)
LPS: Pressure seal bonnet gate
JPS: Pressure seal bonnet globe
OPS: Pressure seal cap swing check

b Seat material:

Code	Disc Seat Material	Body Seat Material
S□	13Cr	HF
S□Y	HF	HF

□ : Special shell material code

c Special shell material:
No code is required for WCB. Refer to "Valve Shell Materials" on Page 03, for special shell materials.

4 Type of end connection:
No code is required for RF-flanged ends
W: Butt-welding ends.
Refer to "Contact Face of Flanges" on Page 05.

5 Type of valve operation:
No code is required for manual handwheel operation.
G : Gear operation.
E : Electric actuator operation.

General Design Specifications

Items	American Std.			British Std.
	Bolted Bonnet	Pressure Seal	Through Conduit	
Shell wall thickness and general valve design	API 600	ASME B 16.34	API 6D	BS/ISO 10434 (Gate valve) BS 1873 (Globe valve) BS 1868 (Check valve)
Pressure-temperature ratings	ASME B16.34			BS EN 1759-1
Face-to-face dimensions End-to-end dimensions	ASME B16.10		API 6D	BS EN 558-1
End flange dimensions Gasket contact facing	ASME B16.5*			BS EN 1759-1
Welding end dimensions	ASME B16.25		–	BS/ISO 10434 (Gate valve) BS 1873 (Globe valve) BS 1868 (Check valve)

*MSS SP-44 for Nominal size 22 and ASME B16.47 Series B for Nominal size 26 and larger, for end flange dimensions.

Valve Shell Materials

Besides ASTM A216 WCB, the standard material, KITZ cast steel valves are optionally available with the materials listed below:

ASTM Specification	Material Designation	Working Temperature* °F (°C)	KITZ code
A216 WCB / A216 WCC	Carbon steel	1000 (538) Maximum	–
A217 WC1	C–1/2 Mo		1C
A217 WC6	11/4 Cr–1/2 Mo	1100 (593) Maximum	6C
A217 WC9	21/4 Cr–1Mo		9C
A217 C5	5Cr–1/2 Mo	1200 (649) Maximum	5C
A217 C12	9Cr–1Mo		12C
A352 LCB	Carbon steel	–50 (–46) Minimum	BL
A352 LCC	Carbon steel		CL
A352 LC1	C–1/2 Mo	–75 (–59) Minimum	1L
A352 LC2	21/2 Ni –100	–100 (–73) Minimum	2L
A352 LC3	31/2 Ni –150	–150 (–101) Minimum	3L

For ASTM A351 Austenitic Stainless Steel Valves, refer to KITZ Cat.No.E-150.

*Refer to ASME B16.34 for details of ASTM A216, A217 and A352 Pressure-temperature ratings. (See page 21 for A216 and A217)
The minimum working temperature of ASTM A352 is based on ASME B31.3.

KITZ Low Temperature Service Valves

KITZ Corporation offers Class 150, 300 and 600 API 600 design low alloy steel valves for low temperature service down to -150°F (-101°C) . Detailed design information is available on request.

Valve Trim Materials

API 600 and BS 1873/1868 specify the following valve components as the valve trim:

Description	Gate Valve	Globe Valve	Check Valve
Disc seat surface	●	●	●
Body seat surface	●	●	●
Bonnet bush (Backseat)	●	●	–
Stem	●	●	–
Others	Internal small parts	Lock nut	Hinge Pin
Specified by	API 600	BS 1873	BS 1868

Disc seat and body seat

Following trims specified in API 600, Table 8, are available in KITZ either as our standard or at your option. Composition of combination trims, which employs different seating surface materials for disc seat and body seat, shall be arranged at the manufacturer's discretion, unless specified in advance.

Combination number	Material description	Brinell hardness
5.	HF / HF	350HB min.
8.	13Cr / HF	250HB min. / 350HB min.
11.*	Ni-Cu alloy (Monel) / HF	Not specified / 350HB min.
12.*	18Cr-8Ni-Mo (316) / HF	Not specified / 350HB min.
14.*	19Cr-29Ni (Alloy 20) / HF	Not specified / 350HB min.

*Optionally available.
HF: Co-Cr-W Alloy (Stellite No.6) deposited.

Stems and bonnet bushing (backseat bushing)

ASTM A182 (F6a) is our standard material for stems and bonnet bushing. The other materials including ASTM A182 (F304), A182 (F316), Monel and Alloy 20 are available on your specific request.

Body Seat Rings

Body seat rings of KITZ cast steel valves are mounted on the valve body by seal welding as shown in the typical examples of gate valves illustrated below. Unless specifically requested in advance, mounting of body seat rings shall be made at the manufacturer's discretion. Specify your own method of mounting, noting your purchase orders with adequate KITZ product code numbers.

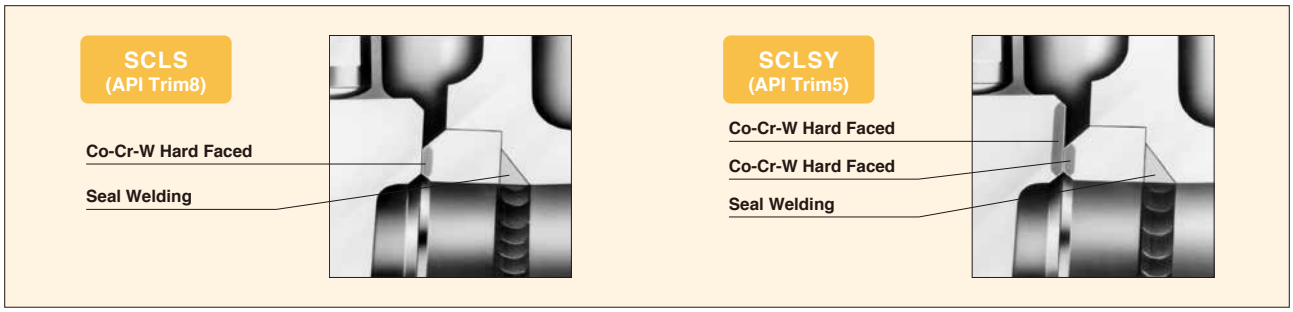

For KITZ cast steel valves made of ASTM A216 WCB, the standard shell material, disc seats and body seat rings are provided as follows. (Refer to Page 02 for Product Coding)

KITZ Product Code	Standard Disc Seat	Standard Body Seat	Mounting of Body Seat Rings
SCLS (Gate) SCJS (Globe) SCOS (Check)	F6a or WCB + 13Cr or A105 + 13Cr or CA15	A105 + HF* or A106 Gr. B + HF* or AISI 1022 + HF* or Direct HF**	Seal Welded or Direct HF**
SCLSY (Gate) SCJSY (Globe) SCOSY (Check)	A105 + HF* or WCB + HF* or CA15 + HF*	A105 + HF* or A106 Gr. B + HF* or AISI 1022 + HF* or Direct HF**	Seal Welded or Direct HF**

* Co-Cr-W Alloy deposited for hard facing.
** Co-Cr-W Alloy is directly deposited on valve body for hard facing.
KITZ Product Code 900SCJS, 900SCJSY, 1500SCJS and 1500SCJSY globe valves employ this hard facing.

Bonnet Gasket Materials

Depending on class ratings and servicing conditions, following gasket materials are available for body/bonnet flange gaskets of KITZ cast steel valves. Specify your gasket material in purchase order.

Gasket Material	Class				
	150	300	600	900	1500
Corrugated metal with flexible graphite	●				
Ring joint metal			●	●	●
Spiral wound metal, flexible graphite filled		●			
Stainless steel inserted flexible graphite	●				

Note: Refer to Page 07 for bonnet gaskets used for KITZ low emission service valves.

Contact Face of Flanges

ASME B16.5 specifies several different types of contact face of flanges as illustrated below. Among them, KITZ cast steel valves employ 0.06 RF for Class 150 and 300, and 0.25 RF for higher pressure classes with an optional employment of ring-joint contact.

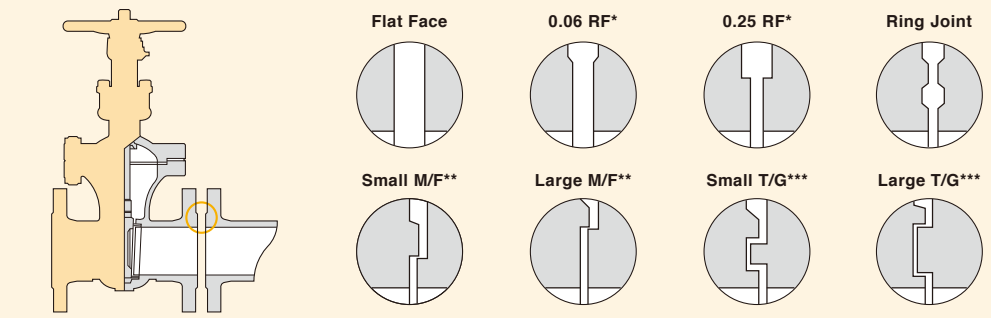

RF*: Raised Face M/F**: Male-Female T/G ***: Tongue & Groove

Gasket contact surface finish of end flanges as well as body-bonnet flanges depends on the materials selected for flange gaskets.

NACE Valves

For servicing sour gases or other Hydrogen Sulfide bearing hydrocarbon fluids, KITZ offers NACE valves made of component materials specially heat-treated and hardness-controlled in comformity with NACE MR0103, KITZ Standard, or optionally NACE MR0175 Standard.
Typical NACE material configuration is shown below for KITZ cast steel gate valves. A note should be taken on the fact that NACE hardness requirement conflicts with the valve trim. KITZ NACE steel valves are available only as a specified option.

Valve Parts	ASTM Specification	NACE Hardness
Body/bonnet	A216 WCB	≦ HRC 22 (237 HB)
Disc	A216 WCB or AISI Type 410 or A217 CA15	
Disc seat	*13Cr deposit or AISI Type 410	
Gland	*AISI Type 410	
Stem		
Bonnet bushing		
Body seat surface	HF**	≧ 350 HB
Bonnet bolts	A193 B7	—
	A193 B7M***	≦ HRC 22
Bonnet nuts	A194 2H	—
	A194 2HM***	≦ HRC 22

*Double tempered. (Three step process) **Co-Cr-W Alloy deposited for hard facing.
***The general requirements conform to NACE MR0175 standard.
The users should be aware that it can be necessary to lower equipment pressure ratings when using SSC-resistant bolt and nut.
Please contact KITZ for more information.

Inspection and Warranty Policy of KITZ Corporation

Every piece of KITZ cast carbon and low alloy steel valves is subjected to 100% pressure test, according to API 598 requirements. Manufacturer's material test reports and inspection certificates are available on your request, while each valve is guaranteed for 12 months after installation in service, but not exceeding 18 months after shipment from the factories of KITZ Corporation.
Various tests and inspections of valves made by KITZ Corporation include the below. Unless otherwise specified, all KITZ cast steel valves shall be subjected to these testing or inspection methods and evaluation criteria.

Test/Inspection Item	Method	Evaluation
Chemical composition analysis		Relevant ASTM Stds.
Mechanical property test	ASTM A370 / E8	Relevant ASTM Stds.
Pressure tests	API 598	API 598
Radiographic inspection	ASTM E94	ASME B16.34
Wet magnetic particle inspection	ASTM E709	
Liquid penetrant inspection	ASTM E165	
Low temperature impact test	ASTM A370 / E23	ASTM A352
Dimensional inspection		Relevant Valve Stds.
Visual inspection		MSS SP-55
Emission test*	EPA Method 21 and KITZ Std.	KITZ Std.

*Applicable to low emission service valves.

Typical KITZ Inspection Flow

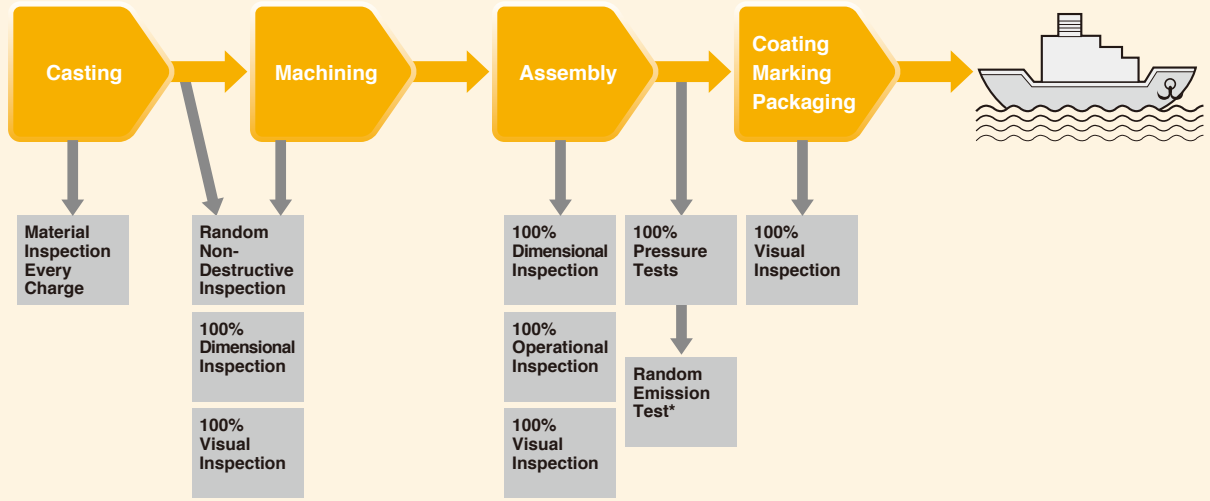

*Applicable to low emission service valves.

KITZ Low Emission Service Valves

In the United States, the Federal Clean Air Act was dramatically amended in 1990, to realize the new environmental protection policy of 95% reduction in fugitive emission or leak levels of toxic gases and chemicals from plant equipment. Promulgated in April, 1994, the new law requires all plants handling the toxic gas specified by the Environmental Protection Agency, to periodically monitor their plant equipment for detection of leaks exceeding 500 ppm, and repair or replace all defective parts immediately. California has exceeded the Federal law with state regulation requiring 100 ppm maximum leak level for astonishing 99% reduction of such environmental pollution for the Northern California Region after 1997.

Our low emission valves, the proud fruits of several years of trial and error at our laboratory, are designed, engineered, manufactured and tested to now meet the 100 ppm maximum emission level. This is the standard specification in North America for KITZ flanged and butt-welding end carbon or low alloy steel valves rated Class 150, 300 and 600. In other markets, all these low emission valves are optionally available. Major design considerations for having upgraded our standard valves to the low emission performers are introduced below.

Gland packing

KITZ's original "SEALEVER®" flexible graphite packing set, consisting of 4 dieformed flexible graphite rings* and 2 braided flexible graphite rings, combined with a spacer bush for Class 300 and above rated valves.

*US Patent No. 5522603 & 5573253. Other patents registered or pending worldwide.

Bonnet gaskets (including check valve cover gaskets)

Class 150 : Flexible graphite sheet with stainless steel insert or corrugated metal with flexible graphite and permeation protective barrier for low emission service

Class 300: Spiral wound (flexible graphite filler and stainless steel hoop) with a stainless steel inner ring

Class 600 & above : Ring joint metal gasket

Diametrical interface clearance

20 to 32 mils (0.5 to 0.8 mm) : Stem to gland
20 to 32 mils (0.5 to 0.8 mm) : Stem to bonnet bushing
4 to 12 mils (0.1 to 0.3 mm) : Gland to stuffing boxs

Stem

16 to 32 RMS surface finish. Straightness and roundness are precisely controlled according to KITZ design and manufacturing standards.

Stuffing box

Maximum 125 RMS surface finish. Cylindricity and verticality are precisely controlled according to KITZ design and manufacturing standards.

Plug gaskets for check valves

Class 150/300 : Flexible graphite sheet with stainless steel insert and permeation protective barrier.

Class 600 & above : Spiral wound metal with flexible graphite filled

Product identification

Stainless steel ID plate with the letters "LOW EMISSION" in orange is welded on the bonnet flanges.

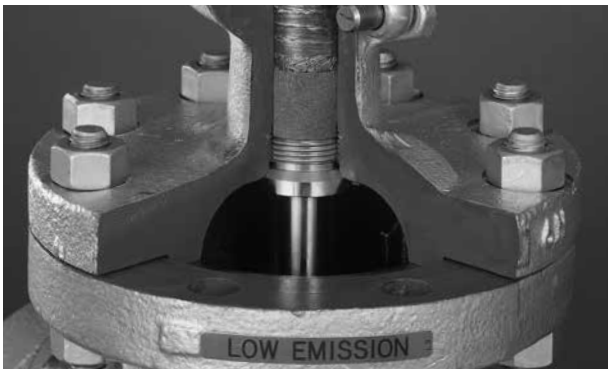

YRT Emission Test Results

In addition to our in-house lab tests and certifications by Lloyd's Register of Shipping, a third-party perfomance test was carried out on a KITZ nominal size 6 Class 300 gate valve at Yarmouth Research and Technology, Maine, USA, according to one user's testing specifications. The test conditions included an unprecedented 3500 cycle operation of a 99% methane pressurized valve through thermal cycles at 350°F (177℃), with the valve stem positioned horizontally to the ground, and the leak level was monitored at every 100 cycles, from an aluminum foil housing sealed the valve gland area. In spite of these severe test conditions, the results were in close agreement with findings from the tests made at our laboratory over the last several years.

Design Features of KITZ Gate Valve Wedges (Discs)

Among the four different shapes of wedge gates recognized by API 600 Paragraph 5.6.1.1 and 5.6.1.2, KITZ has adopted solid wedges for smaller valves such as nominal size 2 to 4 of Class 900/1500 gate valves, and flexible wedges for all other sizes of all pressure classes.

H-shaped flexible wedges are featured with mechanical flexibility to adjust its own shape following the shape of the body seats for tightly secured mutual contact. This is particularly important when larger gate valves are served in extremely high pressure and temperature, where temporary deformation of the valve body always occurs. Operational torque is smaller, seat wear is less and valve closure is tighter when H-shaped flexible wedges are adopted.

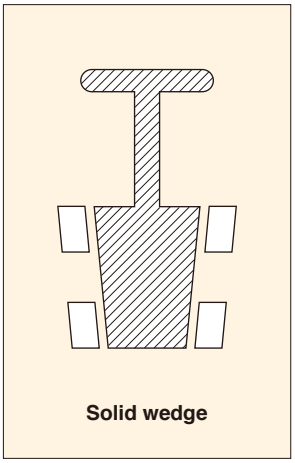

Solid wedge

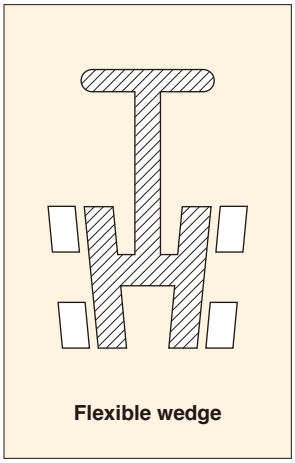

Flexible wedge

Solidly designed KITZ wedge gates are forged or cast solid, single piece of steel without any welding work. Specially heat-treated wedges are firmly coupled with integral T-head of the valve stems, which are also ruggedly designed and specially heat-treated for the highest possible durability of stem to wedge connection. API 600 Paragraph 5.8.8 particularly emphasizes the importance of the mechanical strength of this connection.

As another unique feature, KITZ wedge gates are designed for always accurately maintained concentricity and carefully lapped for leakfree contact.

Side View

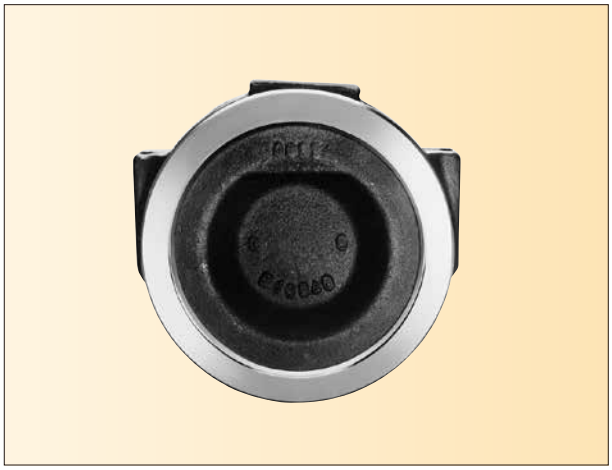

Front View

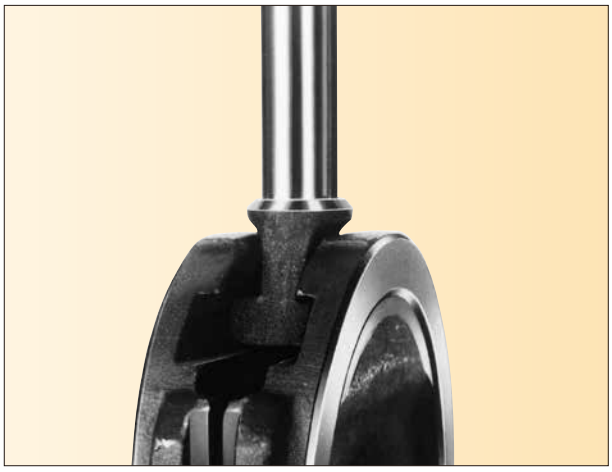

Stem-to-Wedge Connection

Cast Carbon Steel Gate Valve

Bolted bonnet, Outside screw-and-yoke, Rising stem, Non-rising handwheel, Flexible wedge.

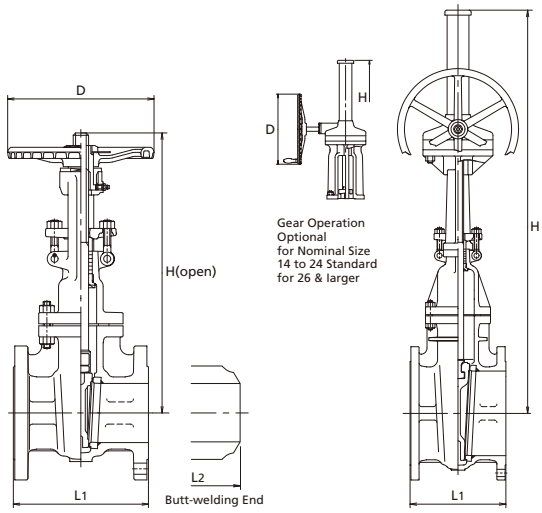

150SCLS G-150SCLS

Fig	End Connections
150SCLS	RF-flanged ends.
W150SCLS	Butt-welding ends.

Standard materials of parts

Parts	Materials
Body	ASTM A216 Gr.WCB
Bonnet	ASTM A216 Gr.WCB
Stem	ASTM A182 Gr.F6a
Disc	13Cr/Carbon Steel+13Cr
Body seat ring	Carbon Steel+HF*
Gland	ASTM A182 Gr.F6a
Gland packing	Flexible Graphite
Gland flange	ASTM A105/A216 Gr. WCB
Handwheel	Ductile iron
Gasket	See Page 6
Bonnet bolt/nut	ASTM A193 Gr.B7/A194 Gr.2H
Gland bolt/nut	ASTM A576 Gr.1045/A194 Gr.2H
Bonnet bushing	ASTM A182 Gr.F6a
Yoke sleeve	ASTM A439 Tp.D2
Grease nipple	Carbon steel

*Hard facing with Co-Cr-W Alloy.
Note: Refer to Page 5&6 for standard seat material and construction.

Dimensions

Nominal Size		1½	2	2½	3	4	5	6	8	10	12	14	16	18	20	22	24	26	28	30	32	34	36
		40	50	65	80	100	125	150	200	250	300	350	400	450	500	550	600	650	700	750	800	850	900
L_1	in	6.50	7.00	7.50	8.00	9.00	10.00	10.50	11.50	13.00	14.00	15.00	16.00	17.00	18.00	19.00	20.00	22.00	24.00	24.00	26.00	28.00	28.00
	mm	165	178	190	203	229	254	267	292	330	356	381	406	432	457	483	508	559	610	610	660	711	711
L_2	in	—	8.50	9.50	11.14	12.00	15.00	15.86	16.50	18.00	19.76	22.50	24.00	26.00	28.00	30.00	32.00	34.00	36.00	36.00	38.00	40.00	40.00
	mm	—	216	241	283	305	381	403	419	457	502	572	610	660	711	762	813	864	914	914	965	1016	1016
H	in	15.2	15.2	17.0	20.1	23.3	25.9	29.9	37.8	45.8	53.6	61.9	66.6	74.3	83.6	91.6	98.1	111.6	118.7	123.4	132.3	141.7	149.0
	mm	385	385	432	509	592	658	758	958	1162	1362	1572	1692	1888	2123	2326	2497	2835	3015	3135	3360	3600	3785
D	in	7.9	7.9	7.9	9.8	9.8	11.8	11.8	13.8	15.7	17.7	23.6	23.6	23.6	26.8	26.8	29.9	19.7	23.6	23.6	23.6	23.6	23.6
	mm	200	200	200	250	250	300	300	350	400	450	600	600	600	680	680	760	500	600	600	600	600	600

Bolted bonnet, Outside screw-and-yoke, Rising stem, Non-rising handwheel, Flexible wedge.

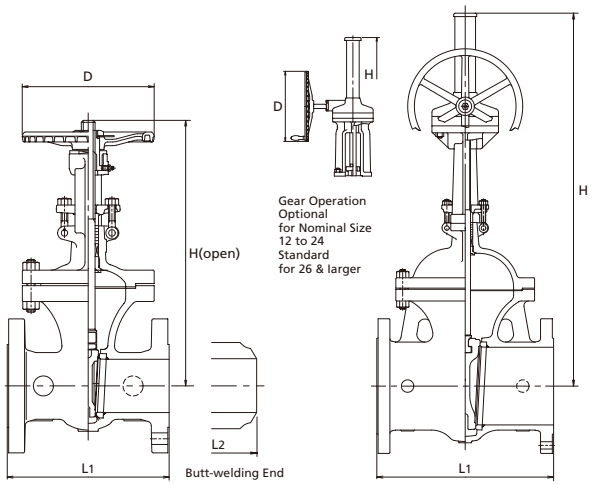

300SCLS G-300SCLS

Fig	End Connections
300SCLS	RF-flanged ends.
W300SCLS	Butt-welding ends.

Standard materials of parts

Parts	Materials
Body	ASTM A216 Gr.WCB
Bonnet	ASTM A216 Gr.WCB
Stem	ASTM A182 Gr.F6a
Disc	13Cr/Carbon Steel+13Cr
Body seat ring	Carbon Steel+HF*
Gland	ASTM A182 Gr.F6a
Gland packing	Flexible Graphite
Gland flange	ASTM A105/A216 Gr. WCB
Handwheel	Ductile iron
Gasket	See Page 6
Bonnet bolt/nut	ASTM A193 Gr.B7/A194 Gr.2H
Gland bolt/nut	ASTM A576 Gr.1045/A194 Gr.2H
Bonnet bushing	ASTM A182 Gr.F6a
Yoke sleeve	ASTM A439 Tp.D2
Grease nipple	Carbon steel

*Hard facing with Co-Cr-W Alloy.
Note: Refer to Page 5&6 for standard seat material and construction.

Dimensions

Nominal Size		1½	2	2½	3	4	5	6	8	10	12	14	16	18	20	22	24	26	28	30	32	34	36
		40	50	65	80	100	125	150	200	250	300	350	400	450	500	550	600	650	700	750	800	850	900
L_1	in	7.50	8.50	9.50	11.14	12.00	15.00	15.86	16.50	18.00	19.76	30.00	33.00	36.00	39.00	43.00	45.00	49.00	53.00	55.00	60.00	64.00	68.00
	mm	190	216	241	283	305	381	403	419	457	502	762	838	914	991	1092	1143	1245	1346	1397	1524	1626	1727
L_2	in	—	8.50	9.50	11.14	12.00	15.00	15.86	16.50	18.00	19.76	30.00	33.00	36.00	39.00	43.00	45.00	49.00	53.00	55.00	60.00	64.00	68.00
	mm	—	216	241	283	305	381	403	419	457	502	762	838	914	991	1092	1143	1245	1346	1397	1524	1626	1727
H	in	16.3	16.3	18.0	20.9	24.3	27.3	31.2	39.9	47.9	56.6	61.5	69.5	76.1	84.1	93.1	100.1	112.0	123.8	131.3	143.7	150.0	153.5
	mm	413	413	456	530	618	694	793	1014	1216	1458	1563	1766	1932	2137	2364	2542	2845	3145	3335	3650	3810	3900
D	in	7.9	7.9	7.9	9.8	9.8	11.8	13.8	15.7	17.7	23.6	23.6	23.6	26.8	29.9	29.9	35.8	23.6	23.6	23.6	23.6	23.6	23.6
	mm	200	200	200	250	250	300	350	400	450	600	600	680	680	760	760	910	600	600	600	600	600	600

Cast Carbon Steel Gate Valve

Bolted bonnet, Outside screw-and-yoke, Rising stem, Non-rising handwheel, Flexible wedge.

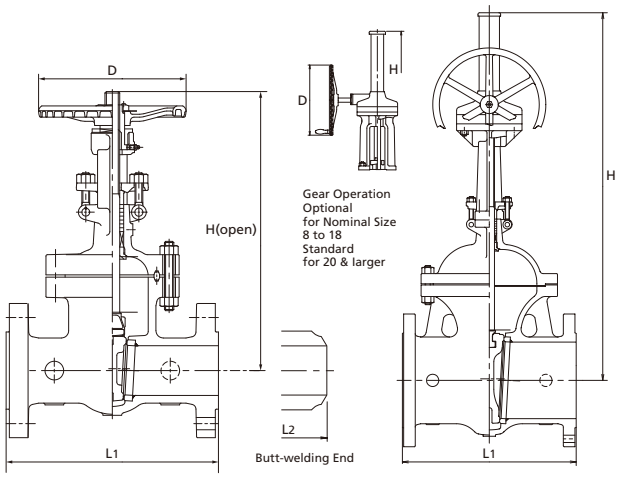

600SCLS G-600SCLS

Fig	End Connections
600SCLS	RF-flanged ends.
W600SCLS	Butt-welding ends.

Standard materials of parts

Parts	Materials
Body	ASTM A216 Gr.WCB
Bonnet	ASTM A216 Gr.WCB
Stem	ASTM A182 Gr.F6a
Disc	13Cr/Carbon Steel+13Cr
Body seat ring	Carbon Steel+HF*
Gland	ASTM A182 Gr.F6a
Gland packing	Flexible Graphite
Gland flange	ASTM A105/A216 Gr. WCB
Handwheel	Ductile iron
Gasket	See Page 6
Bonnet bolt/nut	ASTM A193 Gr.B7/A194 Gr.2H
Gland bolt/nut	ASTM A576 Gr.1045/A194 Gr.2H
Bonnet bushing	ASTM A182 Gr.F6a
Yoke sleeve	ASTM A439 Tp.D2
Grease nipple	Carbon steel

*Hard facing with Co-Cr-W Alloy.
Note: Refer to Page 5&6 for standard seat material and construction.

Dimensions

Nominal Size		2	2½	3	4	5	6	8	10	12	14	16	18	20	22	24
		50	65	80	100	125	150	200	250	300	350	400	450	500	550	600
L_1	in	11.50	13.00	14.00	17.00	20.00	22.00	26.00	31.00	33.00	35.00	39.00	43.00	47.00	51.00	55.00
	mm	292	330	356	432	508	559	660	787	838	889	991	1092	1194	1295	1397
L_2	in	11.50	13.00	14.00	17.00	20.00	22.00	26.00	31.00	33.00	35.00	39.00	43.00	47.00	51.00	55.00
	mm	292	330	356	432	508	559	660	787	838	889	991	1092	1194	1295	1397
H	in	17.6	19.6	21.5	26.3	30.4	35.2	41.9	49.5	57.6	62.7	70.0	81.5	88.8	98.4	107.5
	mm	446	497	545	667	771	893	1094	1257	1464	1593	1779	2070	2256	2500	2730
D	in	7.9	9.8	9.8	11.8	15.7	17.7	19.7	23.6	26.8	29.9	29.9	35.8	23.6	23.6	24.0
	mm	200	250	250	300	400	450	500	600	680	760	760	910	600	600	610

Bolted bonnet, Outside screw-and-yoke, Rising stem, Non-rising handwheel, Solid wedge (Nominal Size 2 to 4) or Flexible wedge (Nominal Size 6& larger).

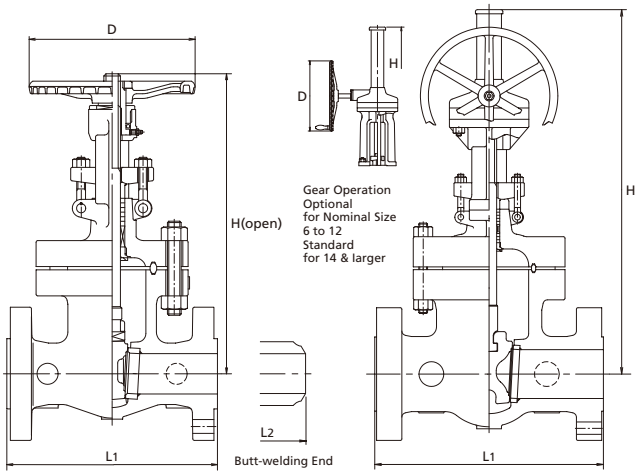

900SCLS G-900SCLS

Fig	End Connections
900SCLS	RF-flanged ends.
W900SCLS	Butt-welding ends.

Standard materials of parts

Parts	Materials
Body	ASTM A216 Gr.WCB
Bonnet	ASTM A216 Gr.WCB
Stem	ASTM A182 Gr.F6a
Disc	13Cr/Carbon Steel+13Cr
Body seat ring	Carbon Steel+HF*
Gland	ASTM A182 Gr.F6a
Gland packing	Flexible Graphite
Gland flange	ASTM A105/A216 Gr. WCB
Handwheel	Ductile iron
Gasket	See Page 6
Bonnet bolt/nut	ASTM A193 Gr.B7/A194 Gr.2H
Gland bolt/nut	ASTM A576 Gr.1045/A194 Gr.2H
Bonnet bushing	ASTM A182 Gr.F6a
Yoke sleeve	ASTM A439 Tp.D2
Grease nipple	Carbon steel

*Hard facing with Co-Cr-W Alloy.
Note: Refer to Page 5&6 for standard seat material and construction.

Dimensions

Nominal Size		2	3	4	6	8	10	12	14	16	18	20	24
		50	80	100	150	200	250	300	350	400	450	500	600
L_1	in	14.50	15.00	18.00	24.00	29.00	33.00	38.00	40.50	44.50	48.00	52.00	61.00
	mm	368	381	457	610	737	838	965	1029	1130	1219	1321	1549
L_2	in	14.50	15.00	18.00	24.00	29.00	33.00	38.00	40.50	44.50	48.00	52.00	61.00
	mm	368	381	457	610	737	838	965	1029	1130	1219	1321	1549
H	in	20.5	24.5	27.8	35.4	42.8	50.6	59.0	62.2	69.5	85.8	94.5	105.5
	mm	520	621	706	900	1087	1285	1498	1581	1830	2180	2435	2680
D	in	9.8	11.8	13.8	19.7	23.6	26.8	29.9	23.6	23.6	23.6	24.0	24.0
	mm	250	300	350	500	600	680	760	760	600	600	610	610

Cast Carbon Steel Gate Valve

Bolted bonnet, Outside screw-and-yoke, Rising stem, Non-rising handwheel, Solid wedge (Nominal Size 2 to 4) or Flexible wedge (Nominal Size 6& larger).

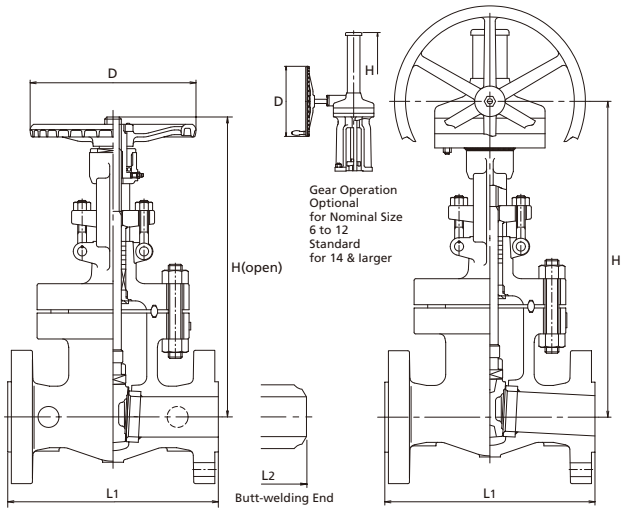

1500SCLS G-1500SCLS

Fig	End Connections
1500SCLS	RF-flanged ends.
W1500SCLS	Butt-welding ends.

Standard materials of parts

Parts	Materials
Body	ASTM A216 Gr.WCB
Bonnet	ASTM A216 Gr.WCB
Stem	ASTM A182 Gr.F6a
Disc	13Cr/Carbon Steel+13Cr
Body seat ring	Carbon Steel+HF*
Gland	ASTM A182 Gr.F6a
Gland packing	Flexible Graphite
Gland flange	ASTM A105/A216 Gr. WCB
Handwheel	Ductile iron
Gasket	See Page 6
Bonnet bolt/nut	ASTM A193 Gr.B7/A194 Gr.2H
Gland bolt/nut	ASTM A576 Gr.1045/A194 Gr.2H
Bonnet bushing	ASTM A182 Gr.F6a
Yoke sleeve	ASTM A439 Tp.D2
Grease nipple	Carbon steel

*Hard facing with Co-Cr-W Alloy.
Note: Refer to Page 5&6 for standard seat material and construction.

Dimensions

Nominal Size		2	2 1/2	3	4	6	8	10	12	14	16
		50	65	80	100	150	200	250	300	350	400
L_1	in	14.50	16.50	18.50	21.50	27.75	32.75	39.00	44.50	49.50	54.50
	mm	368	419	470	546	705	832	991	1130	1257	1384
L_2	in	14.50	16.50	18.50	21.50	27.75	32.75	39.00	44.50	49.50	54.50
	mm	368	419	470	546	705	832	991	1130	1257	1384
H	in	22.0	25.4	27.0	30.4	40.6	49.1	58.1	65.2	69.0	51.1
	mm	559	635	685	772	1031	1248	1475	1656	1750	2060
D	in	9.8	11.8	13.8	15.7	23.6	26.8	35.8	35.8	23.6	24.0
	mm	250	300	350	400	600	680	910	910	600	610

Cast Carbon Steel Globe Valve

Bolted bonnet, Outside screw-and-yoke, Rising stem handwheel, Swivel disc.

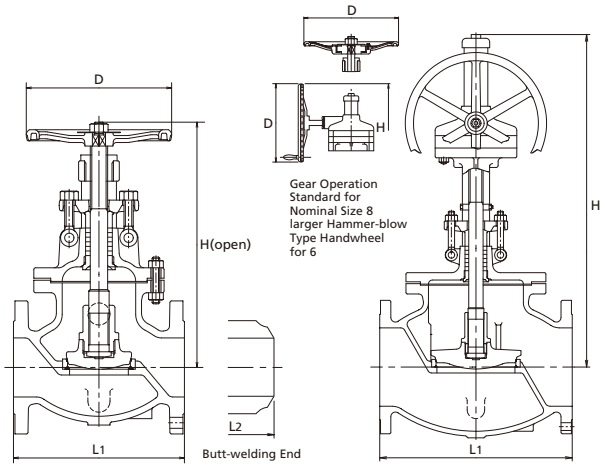

150SCJS G-150SCJS

Fig	End Connections
150SCJS	RF-flanged ends.
W150SCJS	Butt-welding ends.

Standard materials of parts

Parts	Materials
Body	ASTM A216 Gr.WCB
Bonnet	ASTM A216 Gr.WCB
Stem	ASTM A276 Tp.403
Disc	13Cr/Carbon Steel+13Cr
Lock nut	ASTM A182 Gr.F6a
Body seat ring	Carbon Steel+HF*
Gland	ASTM A182 Gr.F6a
Gland packing	Flexible Graphite
Gland flange	ASTM A105/A216 Gr. WCB
Handwheel	Ductile iron
Gasket	See Page 6
Bonnet bolt/nut	ASTM A193 Gr.B7/A194 Gr.2H
Gland bolt/nut	ASTM A576 Gr.1045/A194 Gr.2H
Bonnet bushing	ASTM A182 Gr.F6a
Yoke sleeve	ASTM A439 Tp.D2

*Hard facing with Co-Cr-W Alloy.
Note: Refer to Page 5&6 for standard seat material and construction.

Dimensions

Nominal Size		1 1/2	2	2 1/2	3	4	5	6	8	10	12	14	16	18
		40	50	65	80	100	125	150	200	250	300	350	400	450
L_1	in	6.50	8.00	8.50	9.50	11.50	14.00	16.00	19.50	24.50	27.50	31.00	36.00	38.50
	mm	165	203	216	241	292	356	406	495	622	698	787	914	978
L_2	in	—	8.00	8.50	9.50	11.50	14.00	16.00	19.50	24.50	37.50	31.00	36.00	38.50
	mm	—	203	216	241	292	356	406	495	622	698	787	914	978
H	in	13.0	13.0	14.9	15.3	18.0	19.1	20.2	24.8	38.4	41.3	43.5	48.2	49.8
	mm	331	331	379	389	458	484	513	929	975	1049	1106	1224	1275
D	in	7.9	7.9	9.8	9.8	9.8	11.8	13.8	15.7	19.7	19.7	19.7	23.6	23.6
	mm	200	200	250	250	250	300	350	500	500	500	500	600	600

Bolted bonnet, Outside screw-and-yoke, Rising stem handwheel, Swivel disc.

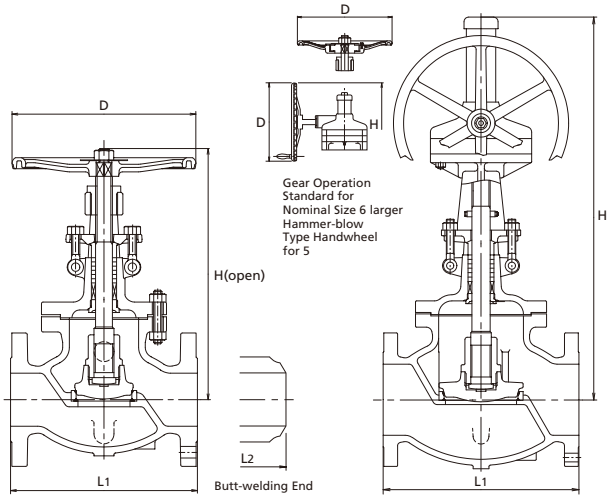

300SCJS G-300SCJS

Fig	End Connections
300SCJS	RF-flanged ends.
W300SCJS	Butt-welding ends.

Standard materials of parts

Parts	Materials
Body	ASTM A216 Gr.WCB
Bonnet	ASTM A216 Gr.WCB
Stem	ASTM A276 Tp.403
Disc	13Cr/Carbon Steel+13Cr
Lock nut	ASTM A182 Gr.F6a
Body seat ring	Carbon Steel+HF*
Gland	ASTM A182 Gr.F6a
Gland packing	Flexible Graphite
Gland flange	ASTM A105/A216 Gr. WCB
Handwheel	Ductile iron
Gasket	See Page 6
Bonnet bolt/nut	ASTM A193 Gr.B7/A194 Gr.2H
Gland bolt/nut	ASTM A576 Gr.1045/A194 Gr.2H
Bonnet bushing	ASTM A182 Gr.F6a
Yoke sleeve	ASTM A439 Tp.D2

*Hard facing with Co-Cr-W Alloy.
Note: Refer to Page 5&6 for standard seat material and construction.

Dimensions

Nominal Size		1 1/2	2	2 1/2	3	4	5	6	8	10	12	14	16
		40	50	65	80	100	125	150	200	250	300	350	400
L_1	in	9.00	10.50	11.50	12.50	14.00	15.75	17.50	22.00	24.50	28.00	33.00	34.00
	mm	229	267	292	318	356	400	444	559	622	711	838	864
L_2	in	—	10.50	11.50	12.50	14.00	15.75	17.50	22.00	24.50	28.00	33.00	34.00
	mm	—	267	292	318	356	400	444	559	622	711	838	864
H	in	14.2	14.2	16.9	17.2	20.0	24.0	38.9	41.9	45.0	46.7	57.1	55.5
	mm	361	361	428	436	509	610	989	1064	1142	1187	1450	1410
D	in	7.9	7.9	9.8	9.8	13.8	15.7	17.7	19.7	23.6	23.6	23.6	23.6
	mm	200	200	250	250	350	400	500	500	600	600	600	600

Cast Carbon Steel Globe Valve

Bolted bonnet, Outside screw-and-yoke, Rising stem handwheel, Swivel disc.

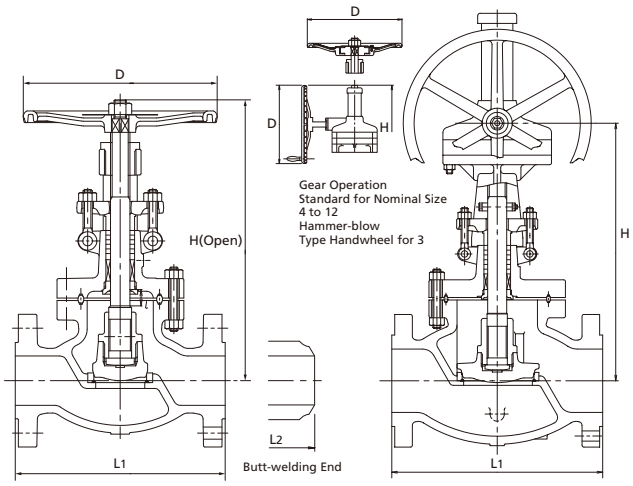

600SCJS G-600SCJS

Fig	End Connections
600SCJS	RF-flanged ends.
W600SCJS	Butt-welding ends.

Standard materials of parts

Parts	Materials
Body	ASTM A216 Gr.WCB
Bonnet	ASTM A216 Gr.WCB
Stem	ASTM A276 Tp.403
Disc	13Cr/Carbon Steel+13Cr
Lock nut	ASTM A182 Gr.F6a
Body seat ring	Carbon Steel+HF*
Gland	ASTM A182 Gr.F6a
Gland packing	Flexible Graphite
Gland flange	ASTM A105/A216 Gr. WCB
Handwheel	Ductile iron
Gasket	See Page 6
Bonnet bolt/nut	ASTM A193 Gr.B7/A194 Gr.2H
Gland bolt/nut	ASTM A576 Gr.1045/A194 Gr.2H
Bonnet bushing	ASTM A182 Gr.F6a
Yoke	ASTM A216 Gr.WCB

*Hard facing with Co-Cr-W Alloy.
Note: Refer to Page 5&6 for standard seat material and construction.

Dimensions

Nominal Size		2	2 1/2	3	4	5	6	8	10	12
		50	65	80	100	125	150	200	250	300
L_1	in	11.50	13.00	14.00	17.00	20.00	22.00	26.00	31.00	33.00
	mm	292	330	356	432	508	559	660	787	838
L_2	in	11.50	13.00	14.00	17.00	20.00	22.00	26.00	31.00	33.00
	mm	292	330	356	432	508	559	660	787	838
H	in	16.0	18.7	20.0	35.3	36.6	39.1	44.1	55.9	62.0
	mm	406	474	508	897	930	993	1121	1420	1575
D	in	9.8	11.8	13.8	19.7	19.7	19.7	23.6	23.6	24.0
	mm	250	300	350	500	500	500	600	610	610

Bolted bonnet, Outside screw-and-yoke, Rising stem, Swivel disc.

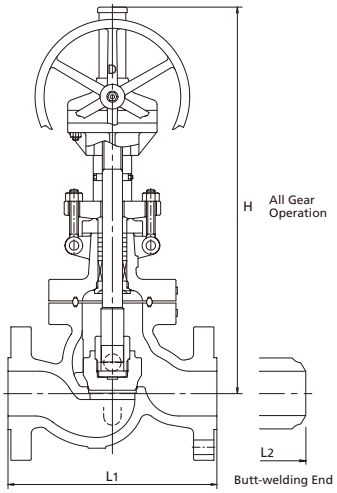

G-900SCJS

Fig	End Connections
900SCJS	RF-flanged ends.
W900SCJS	Butt-welding ends.

Standard materials of parts

Parts	Materials
Body	ASTM A216 Gr.WCB+HF*
Bonnet	ASTM A216 Gr.WCB
Stem	ASTM A276 Tp.403
Disc	13Cr/Carbon Steel+13Cr
Lock nut	ASTM A182 Gr.F6a
Gland	ASTM A182 Gr.F6a
Gland packing	Flexible Graphite
Gland flange	ASTM A105/A216 Gr. WCB
Gasket	See Page 6
Bonnet bolt/nut	ASTM A193 Gr.B7/A194 Gr.2H
Gland bolt/nut	ASTM A576 Gr.1045/A194 Gr.2H
Bonnet bushing	ASTM A182 Gr.F6a
Yoke	ASTM A216 Gr.WCB

*Hard facing with Co-Cr-W Alloy.
Note: Refer to Page 5&6 for standard seat material and construction.

Dimensions

Nominal Size		3	4	6	8
		80	100	150	200
L_1	in	15.00	18.00	24.00	29.00
	mm	381	457	610	737
L_2	in	15.00	18.00	24.00	29.00
	mm	381	457	610	737
H	in	35.4	37.7	46.2	54.4
	mm	900	957	1173	1381
D	in	19.7	19.7	23.6	23.6
	mm	500	500	600	600

Cast Carbon Steel Globe Valve

Bolted bonnet, Outside screw-and-yoke, Rising stem handwheel, Swivel disc.

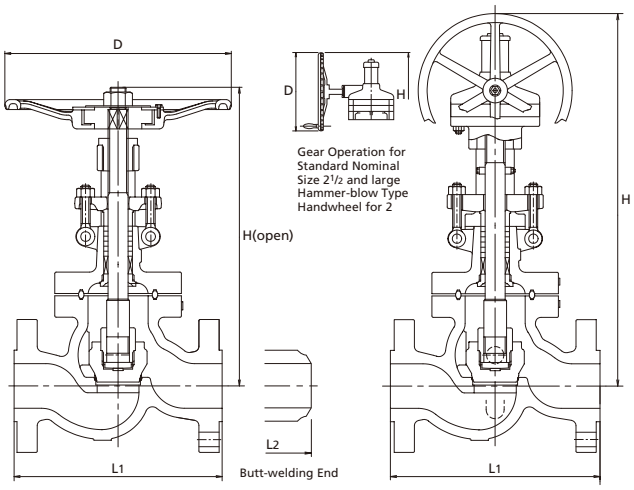

1500SCJS G-1500SCJS

Fig	End Connections
1500SCJS	RF-flanged ends.
W1500SCJS	Butt-welding ends.

Standard materials of parts

Parts	Materials
Body	ASTM A216 Gr.WCB+HF*
Bonnet	ASTM A216 Gr.WCB
Stem	ASTM A276 Tp.403
Disc	13Cr/Carbon Steel+13Cr
Lock nut	ASTM A182 Gr.F6a
Gland	ASTM A182 Gr.F6a
Gland packing	Flexible Graphite
Gland flange	ASTM A105/A216 Gr. WCB
Handwheel	Ductile iron
Gasket	See Page 6
Bonnet bolt/nut	ASTM A193 Gr.B7/A194 Gr.2H
Gland bolt/nut	ASTM A576 Gr.1045/A194 Gr.2H
Bonnet bushing	ASTM A182 Gr.F6a
Yoke	ASTM A216 Gr.WCB

*Hard facing with Co-Cr-W Alloy.
Note: Refer to Page 5&6 for standard seat material and construction.

Dimensions

Nominal Size		2	2½	3	4	6	8
		50	65	80	100	150	200
L_1	in	14.50	16.50	18.50	21.50	27.75	32.75
	mm	368	419	470	546	705	832
L_2	in	14.50	16.50	18.50	21.50	27.75	32.75
	mm	368	419	470	546	705	832
H	in	21.3	36.2	38.0	43.4	53.8	55.1
	mm	540	920	964	1102	1366	1400
D	in	13.8	19.7	19.7	23.6	23.6	24.0
	mm	350	500	500	600	600	610

Cast Carbon Steel Check Valve

Bolted cover, Swing type disc.

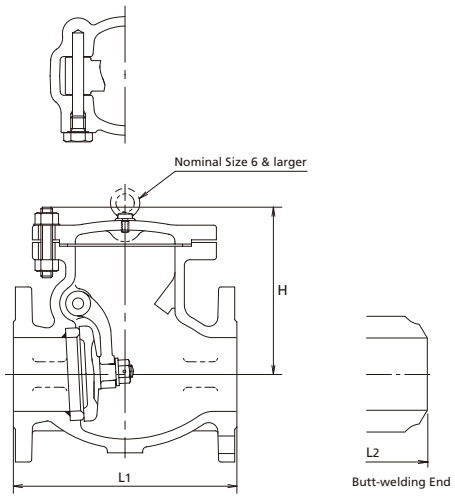

150SCOS

Fig	End Connections
150SCOS	RF-flanged ends.
W150SCOS	Butt-welding ends.

Standard materials of parts

Parts	Materials
Body	ASTM A216 Gr.WCB
Cover	ASTM A105/A216 Gr.WCB
Disc	13Cr/Carbon Steel+13Cr
Disc nut	ASTM A194 Gr.8
Body seat ring	Carbon Steel+HF*
Cover bolt/nut	ASTM A193 Gr.B7/A194 Gr.2H
Arm	ASTM A216 Gr.WCB
Gasket	See Page 6
Plug	ASTM A576 Gr.1045

*Hard facing with Co-Cr-W Alloy.
Note: Refer to Page 5&6 for standard seat material and construction.

Dimensions

Nominal Size		1½	2	2½	3	4	5	6	8	10	12	14	16	18	20	24	26	28	30
		40	50	65	80	100	125	150	200	250	300	350	400	450	500	600	650	700	750
L_1	in	6.50	8.00	8.50	9.50	11.50	13.00	14.00	19.50	24.50	27.50	31.00	34.00	38.50	38.50	51.00	51.00	57.00	60.00
	mm	165	203	216	241	292	330	356	495	622	698	787	864	978	978	1295	1295	1448	1524
L_2	in	—	8.00	8.50	9.50	11.50	13.00	14.00	19.50	24.50	27.50	31.00	34.00	38.50	38.50	51.00	51.00	57.00	60.00
	mm	—	203	216	241	292	330	356	495	622	698	787	864	978	978	1295	1295	1448	1524
H	in	5.2	6.1	6.6	7.3	8.3	9.4	9.8	11.5	13.4	14.8	16.3	17.9	20.0	23.0	26.4	26.8	28.2	29.9
	mm	132	156	168	185	210	239	250	293	340	375	415	455	508	585	670	740	810	871

Bolted cover, Swing type disc.

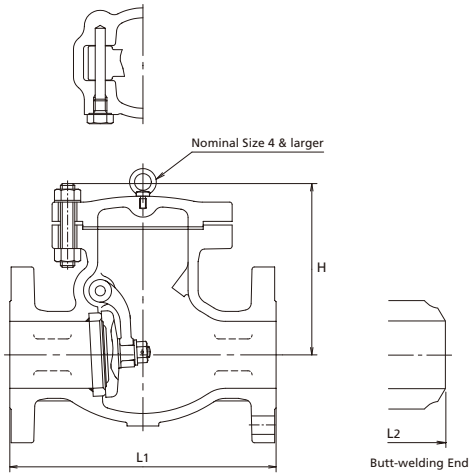

300SCOS

Fig	End Connections
300SCOS	RF-flanged ends.
W300SCOS	Butt-welding ends.

Standard materials of parts

Parts	Materials
Body	ASTM A216 Gr.WCB
Cover	ASTM A105/A216 Gr. WCB
Disc	13Cr/Carbon Steel+13Cr
Disc nut	ASTM A194 Gr.8
Body seat ring	Carbon Steel+HF*
Cover bolt/nut	ASTM A193 Gr.B7/A194 Gr.2H
Arm	ASTM A216 Gr.WCB
Gasket	See Page 6
Plug	ASTM A576 Gr.1045

*Hard facing with Co-Cr-W Alloy.
Note: Refer to Page 5&6 for standard seat material and construction.

Dimensions

Nominal Size		1½	2	2½	3	4	5	6	8	10	12	14	16	18	20	24	28	30
		40	50	65	80	100	125	150	200	250	300	350	400	450	500	600	700	750
L_1	in	9.50	10.50	11.50	12.50	14.00	15.75	17.50	21.00	24.50	28.00	33.00	34.00	38.50	40.00	53.00	59.00	62.75
	mm	241	267	292	318	356	400	444	533	622	711	838	864	978	1016	1346	1499	1594
L_2	in	—	10.50	11.50	12.50	14.00	15.75	17.50	21.00	24.50	28.00	33.00	34.00	38.50	40.00	53.00	59.00	62.75
	mm	—	267	292	318	356	400	444	533	622	711	838	864	978	1016	1346	1499	1594
H	in	5.5	6.5	7.5	8.1	9.1	9.8	11.0	13.0	14.6	16.3	19.3	21.4	23.0	25.4	34.1	36.6	38.4
	mm	155	164	190	205	230	250	280	330	370	415	491	543	584	645	865	930	975

Cast Carbon Steel Check Valve

Bolted cover, Swing type disc.

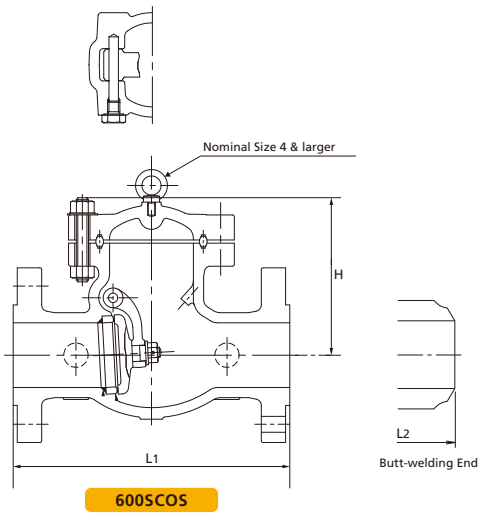

600SCOS

Fig	End Connections
600SCOS	RF-flanged ends.
W600SCOS	Butt-welding ends.

Standard materials of parts

Parts	Materials
Body	ASTM A216 Gr.WCB
Cover	ASTM A216 Gr.WCB
Disc	13Cr/Carbon Steel+13Cr
Disc nut	ASTM A194 Gr.8
Body seat ring	Carbon Steel+HF*
Cover bolt/nut	ASTM A193 Gr.B7/A194 Gr.2H
Arm	ASTM A216 Gr.WCB
Gasket	See page 6
Plug	ASTM A576 Gr.1045

*Hard facing with Co-Cr-W Alloy.
Note: Refer to Page 5&6 for standard seat material and construction.

Dimensions

Nominal Size		2	2½	3	4	6	8	10	12	14	16	18	20	24
		50	65	80	100	150	200	250	300	350	400	450	500	600
L_1	in	11.50	13.00	14.00	17.00	22.00	26.00	31.00	33.00	35.00	39.00	43.00	47.00	55.00
	mm	292	330	356	432	559	660	787	838	889	991	1092	1194	1397
L_2	in	11.50	13.00	14.00	17.00	22.00	26.00	31.00	33.00	35.00	39.00	43.00	47.00	55.00
	mm	292	330	356	432	559	660	787	838	889	991	1092	1194	1397
H	in	7.3	8.3	8.8	10.1	13.1	14.7	17.0	20.0	22.4	24.4	25.8	27.8	35.9
	mm	185	211	224	257	332	372	432	507	568	620	654	733	913

Bolted cover, Swing type disc.

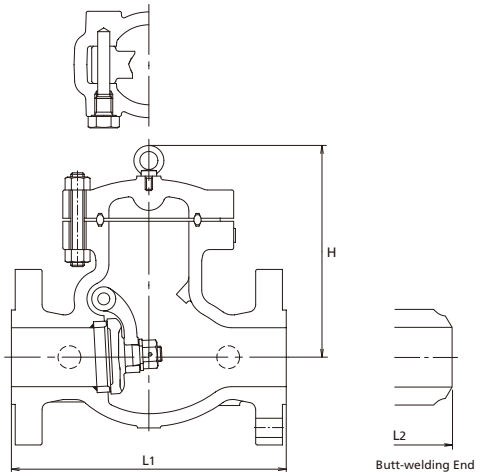

900SCOS

Fig	End Connections
900SCOS	RF-flanged ends.
W900SCOS	Butt-welding ends.

Standard materials of parts

Parts	Materials
Body	ASTM A216 Gr.WCB
Cover	ASTM A216 Gr.WCB
Disc	ASTM A216 Gr.WCB+13Cr
Disc nut	ASTM A194 Gr.8
Body seat ring	Carbon Steel+HF*
Cover bolt/nut	ASTM A193 Gr.B7/A194 Gr.2H
Arm	ASTM A216 Gr.WCB
Gasket	See Page 6
Plug	ASTM A576 Gr.1045

*Hard facing with Co-Cr-W Alloy.
Note: Refer to Page 5&6 for standard seat material and construction.

Dimensions

Nominal Size		3	4	6	8	10	12	14	16	18	20
		80	100	150	200	250	300	350	400	450	500
L_1	in	15.00	18.00	24.00	29.00	33.00	38.00	40.50	44.50	48.00	52.00
	mm	381	457	610	737	838	965	1029	1130	1219	1321
L_2	in	15.00	18.00	24.00	29.00	33.00	38.00	40.50	44.50	48.00	52.00
	mm	381	457	610	737	838	965	1029	1130	1219	1321
H	in	11.5	13.6	17.4	20.6	24.5	28.3	31.3	34.6	37.5	41.0
	mm	292	346	441	524	621	720	794	880	952	1042

Cast Carbon Steel Check Valve

Bolted cover, Swing type disc.

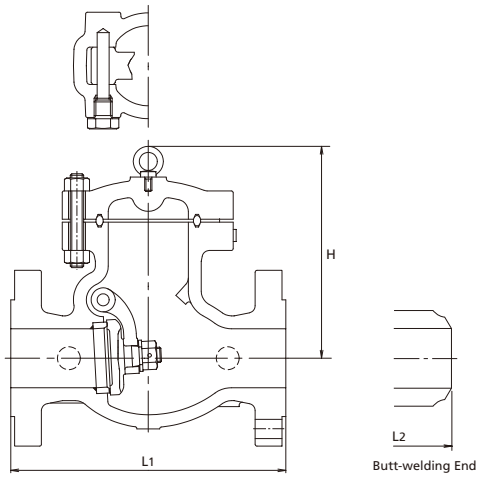

1500SCOS

Fig	End Connections
1500SCOS	RF-flanged ends.
W1500SCOS	Butt-welding ends.

Standard materials of parts

Parts	Materials
Body	ASTM A216 Gr.WCB
Cover	ASTM A216 Gr.WCB
Disc	ASTM A216 Gr.WCB+13Cr
Disc nut	ASTM A194 Gr.8
Body seat ring	Carbon Steel+HF*
Cover bolt/nut	ASTM A193 Gr.B7/A194 Gr.2H
Arm	ASTM A216 Gr.WCB
Gasket	See Page 6
Plug	ASTM A576 Gr.1045

*Hard facing with Co-Cr-W Alloy.
Note: Refer to Page 5&6 for standard seat material and construction.

Dimensions

Nominal Size		2	2½	3	4	6	8	10	12	14	16
		50	65	80	100	150	200	250	300	350	400
L_1	in	14.50	16.50	18.50	21.50	27.75	32.75	39.00	44.50	49.50	54.50
	mm	368	419	470	546	705	832	991	1130	1257	1384
L_2	in	14.50	16.50	18.50	21.50	27.75	32.75	39.00	44.50	49.50	54.50
	mm	368	419	470	546	705	832	991	1130	1257	1384
H	in	11.4	12.4	13.4	15.3	20.2	25.6	29.0	34.4	37.6	42.6
	mm	292	315	339	388	514	649	737	875	955	1082

Through Conduit Gate Valve

Slab gate Valve

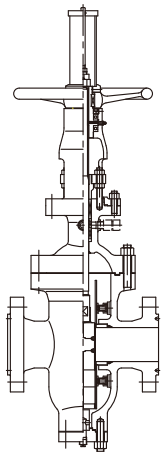

Expanding Gate Valve

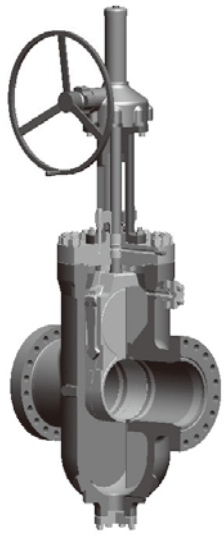

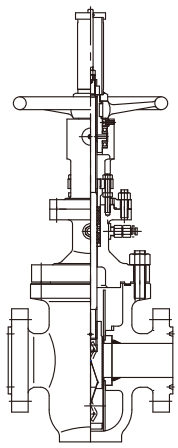

Parts	Materials
Body	A216 Gr.WCC or A105
Bonnet	A216 Gr.WCC
Stem	SUS403
Disc	A216 Gr.WCC + HF* + A105
Gland Packing	Flexible graphite
Gasket	Spiral wound flexible graphite
Body Sheet RIng	Carbon steel + HF*
Handwheel	Ductile Iron

Note: Except for the above trim material, please contact KITZ for more information.
*HF: Hard facing with Co-Cr-W alloy

Product Range

Nominal Size / Fig.	DN	Valve Type	50	65	80	100	150	200	250	300	350	400	450	500	600	650	700	750	800	850	900
	NPS		2	2 1/2	3	4	6	8	10	12	14	16	18	20	24	26	28	30	32	34	36
150SCL6DSCCY		Slab	○	○	○	○	○	○	○	○	○	○	○	○	○	○	○	○	○	○	○
300SCL6DSCCY			○	○	○	○	○	○	○	○	○	○	○	○	○	○	○	○	○	○	○
600SCL6DSCCY			○	○	○	○	○	○	○	○	○	○	○	○	○	○	○	○	○	○	○
900SCL6DSCCY			○	○	○	○	○	○	○	○	○	○	○	○	○	○	○	○	○	○	○
1500SCL6DSCCY			○	○	○	○	○	○	○	○	○	○	○	○	○	○	○	○	○	○	○
2500SCL6DSCCY			○	○	○	○	○	○	○	○											
150SCL6DECCY		Expanging	○	○	○	○	○	○	○	○	○	○	○	○	○						
300SCL6DECCY			○	○	○	○	○	○	○	○	○	○	○	○	○						
600SCL6DECCY			○	○	○	○	○	○	○	○	○	○	○	○	○						
900SCL6DECCY			○	○	○	○	○	○	○	○	○	○	○	○	○						
1500SCL6DECCY			○	○	○	○	○	○	○	○	○	○	○	○	○						

For gear operation specification, please contact KITZ for more information.

■Design standard: API 6D
P-T Rating: ASME B16.34
■In case of gear operation, "G-"will be put before product codes.

Pressure Seal Bonnet Valve

Gate Valve

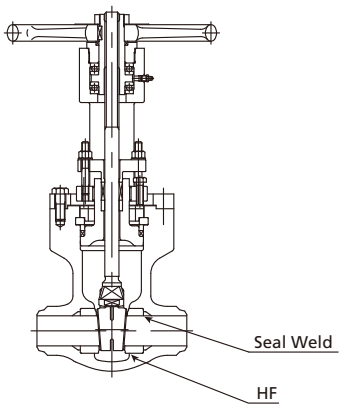

Parts	Materials
Body	A216 Gr.WCB
Bonnet	Up to 200A: A105 250A & over: A216 Gr.WCB
Stem	SUS403 or OHTARON1
Disc	Up to 250A: A105+HF* 300A & over: A216 Gr.WCB+HF*
Gland Packing	Flexible graphite
Gasket	Flexible graphite
Body Seat Ring	A105+HF*
Handwheel	Ductile iron

*HF: Hard facing with Co-Cr-W alloy

Globe Valve

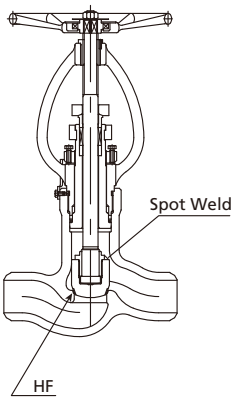

Parts	Materials
Body	A216 Gr.WCB+ HF*
Bonnet	A105
Stem	OHTARON1
Disc	A182 F11+ HF*
Packing	Flexible Graphite
Gasket	Flexible Graphite
Handwheel	SCPH2+SF440A

Check Valve

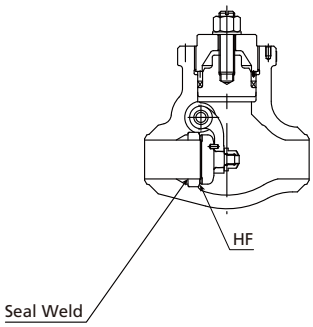

Parts	Materials
Body	A216 Gr.WCB
Cover	A105
Disc	Up to 125A: 105+ HF* 150A and Over: A182 F11+ HF*
Gasket	Flexible graphite
Body Seat Ring	Up to 125A A105+ HF* 150A and over: A182 F11+ HF*

Product Range

(mm)

Nominal Size / Fig.	DN	Valve Type	50	65	80	100	150	200	250	300	350	400	450	500	650
	NPS		2	2 1/2	3	4	6	8	10	12	14	16	18	20	24
900SCLSPS		Gate	○	○	○	○	○	○	○	○	○	○	○	○	○
1500SCLSPS			○	○	○	○	○	○	○	○	○	○	○	○	○
2500SCLSPS			○	○	○	○	○	○	○	○	○	○	○	○	○
900SCJSPS		Globe	○	○	○	○	○	○	○	○					
1500SCJSPS			○	○	○	○	○	○	○	○					
2500SCJSPS			○	○	○	○	○	○	○	○					
900SCOSPS		Check	○	○	○	○	○	○	○	○	○	○	○	○	○
1500SCOSPS			○	○	○	○	○	○	○	○	○	○	○	○	○
2500SCOSPS			○	○	○	○	○	○	○	○	○	○	○	○	○

For gear operation specification, please contact KITZ for more information.

■Design Standard: ASME B16.34
P-T rating: ASME B16.34
■In case of gear operation, "G-"will be put before product codes.

Care for Handling Valves

1. Before installing valves:

Before installing valves, be sure that adequate valves have been prepared to exactly meet the service conditions including the maximum design pressure and temperature. Foreign objects such as sand or scale may be left in the pipes, and care should be taken to remove all of them by filters or strainers to protect valve seat surfaces during subsequent valve commissioning.

2. Installing valves:

On mounting valves, clean the inside of pipes again so that no welding spatter, chips, scale or sand are left. For installation of flanged end valves, flange bolts should be tightened alternately in a star pattern. Where extraordinary external forces such as piping stress may be applied to the flanges of valve being installed, provide valve supports or any other adequate protective measures.

Check body/bonnet bolting during installation, stress relaxation of fasteners can occur during transit and storage.

Lubricate stem and yoke sleeve prior to valve operation. KITZ valves are shipped from the factory with only a little lubricant which facilitates assembly.

3. Retightening valves glands:

When leakage is detected from the gland area while the valve is being in service, the gland nuts should be immediately retightened. Tighten the gland slowly and gradually until the leakage stops, while rotating the valve handwheel. In case the valve operating torque has been found considerably increased after these procedures, it is recommended to replace all packing rings at the time of valve maintenance.

4. Replacing packing rings:

It is recommended to replace packing rings during valve maintenance operation, but never while the valve is being pressurized in service, except when the line pressure is reduced to the atmospheric level. KITZ cast carbon and low alloy steel valves are provided with the backseats on the bonnet bushing. If leakage from the gland area cannot be stopped by retightening the gland nuts, operate the valve to its full open position and add a few packing rings or replace packing rings utilizing sealing function of these backseats.

Sealing function of backseats is sometimes disturbed due to rust or other foreign objects trapped inside. It should be carefully checked before adding or replacing packing rings that backseats function properly. When the valve is highly pressurized, it sometimes causes danger to replace all of packing rings. In this case, adding a few new rings or replacing a few rings on top of the packing chamber is recommended as a first aid solution.
For replacement of packing rings, first remove .the gland nuts and then packing rings. Clean the packing chamber and the valve stem. After checking that all sliding parts are in good condition, securely install new packing rings. Press new packing rings lightly a few times with the gland and then evenly tighten the gland nuts.

Pressure - Temperature Ratings <For reference only>
Valves - Flanged and Welding End : Standard Class

ASTM Material Standard-to ASME B16.34 2013

Temperature		Working Pressures by Class, psig														
		Class 150					Class 300					Class 600				
˚F	˚C	WCB (a)	WC6 (b)	C5 (c)	C12 (c)	LCC (d)	WCB (a)	WC6 (b)	C5 (c)	C12 (c)	LCC (d)	WCB (a)	WC6 (b)	C5 (c)	C12 (c)	LCC (d)
-20 to 100	-29 to 38	285	290	290	290	290	740	750	750	750	750	1,480	1,500	1,500	1,500	1,500
200	93	260	260	260	260	260	680	750	750	750	750	1,360	1,500	1,500	1,500	1,500
300	149	230	230	230	230	230	655	720	730	730	730	1,310	1,445	1,455	1,455	1,455
400	204	200	200	200	200	200	635	695	705	705	705	1,265	1,385	1,410	1,410	1,405
500	260	170	170	170	170	170	605	665	665	665	665	1,205	1,330	1,330	1,330	1,330
600	316	140	140	140	140	140	570	605	605	605	605	1,135	1,210	1,210	1,210	1,210
650	343	125	125	125	125	125	550	590	590	590	590	1,100	1,175	1,175	1,175	1,175
700	371	110	110	110	110	110	530	570	570	570	555	1,060	1,135	1.135	1.135	1,110
750	399	95	95	95	95	95	505	530	530	530	505	1,015	1,065	1,065	1,065	1,015
800	427	80	80	80	80	80	410	510	510	510	410	825	1,015	1,015	1,015	825
850	454	65	65	65	65	65	320	485	485	485	320	640	975	975	975	640
900	482	50	50	50	50	50	230	450	375	450	225	460	900	745	900	445
950	510	35	35	35	35	35	135	320	275	375	135	275	640	550	755	275
1000	538	20	20	20	20	20	85	215	200	255	85	170	430	400	505	170
1050	566		20	20	20			145	145	170			290	290	345	
1100	593		20	20	20			95	100	115			190	200	225	
1150	621		20	20	20			65	60	75			130	125	150	
1200	649		15	15	20			40	35	50			80	70	105	

Temperature		Working Pressures by Class, psig														
		Class 900					Class 1500					Class 2500				
˚F	˚C	WCB (a)	WC6 (b)	C5 (c)	C12 (c)	LCC (d)	WCB (a)	WC6 (b)	C5 (c)	C12 (c)	LCC (d)	WCB (a)	WC6 (b)	C5 (c)	C12 (c)	LCC (d)
-20 to 100	-29 to 38	2,220	2,250	2,250	2,250	2,250	3,705	3,750	3,750	3,750	3,750	6,170	6,250	6,250	6,250	6,250
200	93	2,035	2,250	2,250	2,250	2,250	3,395	3,750	3,750	3,750	3,750	5,655	6,250	6,250	6,250	6,250
300	149	1,965	2,165	2,185	2,185	2,185	3,270	3,610	3,640	3,640	3,640	5,450	6,015	6,070	6,070	6,070
400	204	1,900	2,080	2,115	2,115	2,110	3,170	3,465	3,530	3,530	3,520	5,280	5,775	5,880	5,880	5,865
500	260	1,810	1,995	1,995	1,995	1,995	3,015	3,325	3,325	3,325	3,325	5,025	5,540	5,540	5,540	5,540
600	316	1,705	1,815	1,815	1,815	1,815	2,840	3,025	3,025	3,025	3,025	4,730	5,040	5,040	5,040	5,040
650	343	1,650	1,765	1,765	1,765	1,765	2,745	2,940	2,940	2,940	2,940	4,575	4,905	4,905	4,905	4,905
700	371	1,590	1,705	1,705	1,705	1,665	2,665	2,840	2,840	2,840	2,775	4,425	4,730	4,730	4,730	4,630
750	399	1,520	1,595	1,595	1,595	1,520	2,535	2,660	2,660	2,660	2,535	4,230	4,430	4,430	4,430	4,230
800	427	1,235	1,525	1,525	1,525	1,235	2,055	2,540	2,540	2,540	2,055	3,430	4,230	4,230	4,230	3,430
850	454	955	1,460	1,460	1,460	955	1,595	2,435	2,435	2,435	1,595	2,655	4,060	4,060	4,060	2,655
900	482	690	1,350	1,120	1,350	670	1,150	2,245	1,870	2,245	1,115	1,915	3,745	3,115	3,745	1,855
950	510	410	955	825	1,130	410	685	1,595	1,370	1,885	685	1,145	2,655	2,285	3,145	1,145
1000	538	255	650	595	760	255	430	1,080	995	1,270	430	715	1,800	1,655	2,115	715
1050	566		430	430	515			720	720	855			1,200	1,200	1,430	
1100	593		290	300	340			480	495	565			800	830	945	
1150	621		195	185	225			325	310	375			545	515	630	
1200	649		125	105	155			205	170	255			345	285	430	

(a) Upon prolonged exposure to temperatures above 800˚F, the carbide phase of steel may be converted to graphite. Permissible, but not recommended for prolonged use above 800˚F
(b) Use normalized and tempered material only. Permissible, but not recommended for prolonged use above 1100˚F
(c) Use normalized and tempered material only.
(d) Not to be used over 650˚F.

⚠ CAUTION

Pressure-temperature ratings and other performance data published in this catalog have been developed from our design calculation, in-house testing, field reports provided by our customers and / or published official standards or specifications. They are good only to cover typical applications as a general guideline to users of KITZ products introduced in this catalog.

KITZ Carbon Steel Paintings are suitable for general service conditions. For Painting used in severe atmospheres or at elevated temperatures please contact us for recommendations based on your service environment.

For any specific application, users are kindly requested to contact KITZ Corporation for technical advice, or to carry out their own study and evaluation for proving the suitability of these products to such an application. Failure to follow this request could result in property damage and/or personal injury, for which we shall not be liable.

While this catalog has been compiled with the utmost care, we assume no responsibility for errors, impropriety, or inadequacy. Any information provided in this catalog is subject to from-time-to-time change without notice for error rectification, product discontinuation, design modification, new product introduction or any other cause that KITZ Corporation considers necessary. This edition cancels all previous issues.

Read the instruction manual carefully before use.

⚠ NOTICE

If any products designated as strategic material in the Foreign Exchange and Foreign Trade Law, Cabinet Order Concerning Control of Export Trade, Cabinet order Concerning Control of Foreign Exchange and other related laws and ordinances ("Foreign Exchange Laws") are exported to any foreign country or countries, an export license issued by the Japanese Government will be required under the Foreign Exchange Laws.

Further, there may be cases where an export license issued by the government of the United States or other country will be required under the applicable export-related laws and ordinances in such relevant countries.

The contract shall become effective subject to the fact that a relevant export license is obtained from the Japanese Government.

A chrysanthemum-handle is a symbol of KITZ,
the brand of valve reliability

ISO 9001 certified since 1989

KITZ

KITZ CORPORATION

1-10-1, Nakase, Mihama-ku, Chiba 261-8577, Japan
International Sales Dept.
Phone : 81-43-299-1730, 1732 and 1733
Fax : 81-43-299-0121

— Distributed by —

MIX
Paper from responsible sources
FSC® C103798
FSC www.fsc.org

Printed in Japan

1612①KPC